BULLETIN
IM-1008
REV. NO. 4
AUGUST, 1989

GREENLEE®

915-PS

HYDRAULIC POWER PUMP

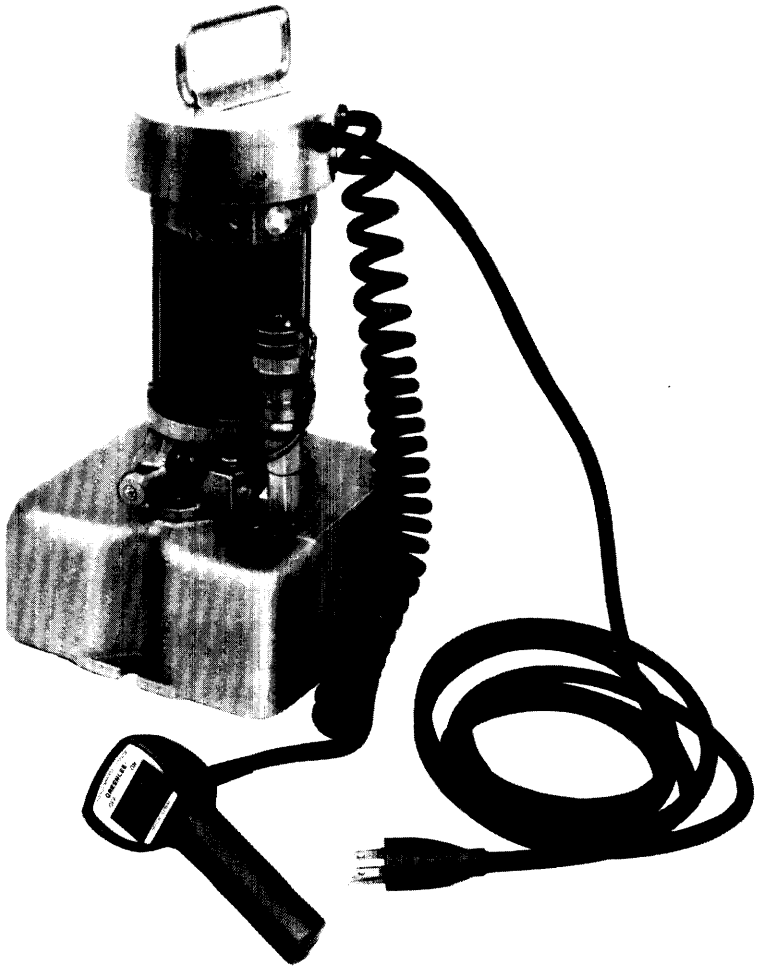

OPERATING, MAINTENANCE INSTRUCTIONS AND PARTS LIST

Pumps starting with Serial No. VR36-5000, Model M3

999 8708.2

©1989 Greenlee Textron Inc.

Printed in U.S.A.

GREENLEE® 915-PS HYDRAULIC POWER PUMP

INTRODUCTION

The 915-PS is a high pressure hydraulic power pump of light weight, durable construction, simple to operate and portable. This power pump has a built-in high volume, low pressure pumping feature which gives fast approach ram action and automatic changeover to low volume, high pressure when pressure exceeds 85 PSI. A safety valve set at 10,000 PSI protects the unit against excessive pressures. The pump has a control lever mounted on top of the reservoir which holds and releases the pressure of single acting rams. The pump is controlled by a two position pendant switch. This toggle switch provides momentary ON in the forward position.

The 915-PS pump is of a radial piston design and will develop up to 10,000 PSI intermittently and 6,000 PSI continuously. The unit delivers approximately 150 cubic inches at 50 PSI and approximately 13 cubic inches at 10,000 PSI.

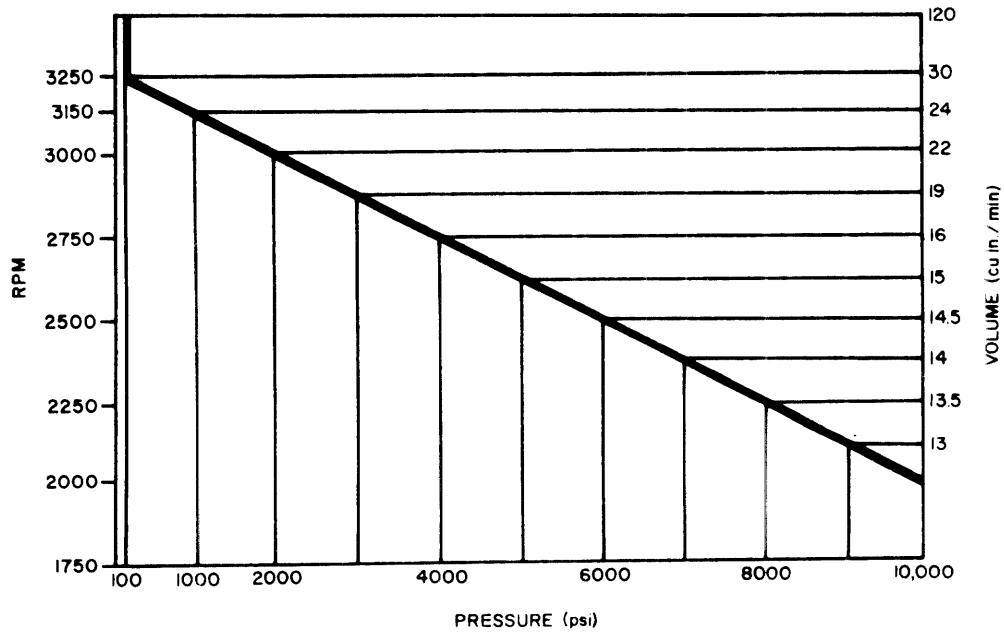

IMPORTANT SAFETY INFORMATION

GROUNDING INSTRUCTIONS

This tool should be grounded while in use to protect the operator from electric shock. The tool is equipped with an approved three-conductor cord and three-prong grounding type plug to fit the proper grounding type receptacle. The green (or green and yellow) conductor in the cord is the grounding wire. Never connect the green (or green and yellow) wire to a live terminal.

If your unit is for use on less than 150 Volts, the power cord is equipped with a plug that has two flat, parallel current-carrying prongs and one longer, round or "U"-shaped, ground prong which requires a mating 3-conductor grounded type receptacle, as shown in Fig. 1.

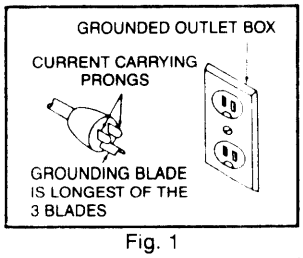

Fig. 1

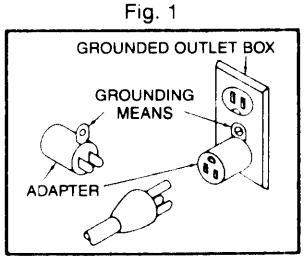

Fig. 2

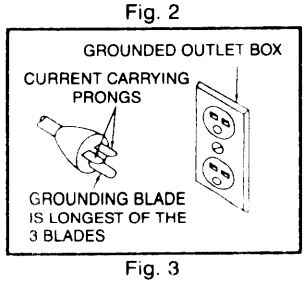

Fig. 3

An adapter, shown in Fig. 2, is available for connecting 3-prong grounding type plugs that are used on units less than 150 Volts to 2-prong receptacles. THIS ADAPTER IS NOT APPLICABLE IN CANADA. The green colored rigid ear, lug, etc., must be connected to a permanent ground such as a properly grounded outlet box, as shown in Fig. 2.

If your unit is for use on 150 to 250 Volts, the power cord is equipped with a plug that has two flat current-carrying prongs in tandem, and one round or "U"-shaped, longer ground prong, as shown in Fig. 3. This plug is used only with the proper mating 3-conductor grounding type receptacle, as shown in Fig. 3. No adapter available for this type plug.

IN ALL CASES, MAKE SURE THE RECEPTACLE IN QUESTION IS PROPERLY GROUNDED.

EXTENSION CORDS

Use only three-wire extension cords which have three prong grounding-type plugs and three-pole receptacle which accept the tool's plug. Replace or repair damaged or worn cord immediately.

GREENLEE® 915-PS HYDRAULIC POWER PUMP

SAFETY RULES FOR ALL TOOLS

As with all power tools there is a certain amount of hazard involved with the operator and his use of the tool. Using the tool with the respect and caution demanded as far as safety precautions are concerned will considerably lessen the possibility of personal injury. However, if normal safety precautions are overlooked or completely ignored, personal injury to the operator can develop.

There are also certain applications for which this tool was designed. Greenlee strongly recommends that this tool NOT be modified and/or used for any application other than for which it was designed. If you have any questions relative to its application DO NOT use the tool until you have written approval from Greenlee Tool Co. and we have advised you.

1. KEEP WORK AREA CLEAN.
Cluttered areas and benches invite accidents.

2. AVOID DANGEROUS ENVIRONMENT.
Don't expose power tools to rain. Don't use power tools in damp or wet locations. Keep work area well lit.

3. KEEP VISITORS AWAY.
All visitors should be kept a safe distance from work area.

4. STORE IDLE TOOLS.
When not in use, tools should be stored in a dry, high or locked up place—out of reach of unauthorized personnel.

5. DON'T FORCE TOOL.
It will do the job better and safer at the rate for which it was designed.

6. USE RIGHT TOOL.
Don't force small tool or attachment to do the job of a heavy tool.

7. WEAR PROPER APPAREL.
No loose clothing or jewelry to get caught in moving parts. Rubber gloves and footwear are recommended when working outdoors.

8. USE SAFETY GLASSES.
Use safety glasses with most tools. Also face or dust mask if cutting operation is dusty.

9. DON'T ABUSE CORD.
Never carry tool by cord or yank it to disconnect from a receptacle. Keep cord from heat, oil and sharp edges.

10. SECURE WORK.
Use clamps or a vise to hold work, it's safer than using your hand and it frees both hands to operate tool.

11. DON'T OVERREACH.
Keep proper footing and balance at all times.

12. MAINTAIN TOOLS WITH CARE.
Keep tools sharp and clean for best and safe performance. Follow instructions for lubricating and changing accessories.

13. DISCONNECT TOOLS.
When not in use; before servicing; when changing accessories such as blades, bits, cutters, etc.

14. REMOVE ADJUSTING KEYS AND WRENCHES.
Form habit of checking to see that keys and wrenches are removed from tool before turning it on.

ASSEMBLY INSTRUCTIONS

The 915-PS pump is completely assembled and is shipped to you as a complete pumping unit. The only assembly necessary is the connection to the ram.

POWER

The 915-PS pump is powered by a Permanent Magnet Motor. A 115 v, 60 Hz, 15 amp power source is required.

OPERATING INSTRUCTIONS

This pump is designed to operate at 10,000 PSI on intermittent service.

1. Make sure dipstick unit is open to vent reservoir before pump is started.
2. Check for proper power connections and for tightness of hose connections before starting pump.
3. Check for hydraulic oil level. (Oil should be within 1/2" of reservoir top.)
4. Start motor and allow pump to idle a few minutes. This will allow the hydraulic oil to work into moving parts and also give prime to pump.

SERVICING INSTRUCTIONS

FILLING OIL RESERVOIR

The oil reservoir must be kept full of a good grade of light hydraulic oil - Greenlee No. 905 0806.8 hydraulic oil or equal. In order for the pump to operate properly, (**CAUTION:** Never use synthetic fluids with poor lubricating qualities, i.e., brake fluids, etc., as permanent injury to the pump will result) 152 cubic inches (5-1/4 Pts) are required, of which 115 cubic inches (4 Pts) are usable. Be sure that your complete operation does not require more than the usable amount of oil.

To refill or add oil to the reservoir, proceed as follows:

1. Remove Pipe Plug, Key No. 39, from reservoir top.
2. Add oil to within 1/2" of the top of the reservoir when Ram is retracted.
3. Re-install Pipe Plug.

FLUSHING SYSTEM

As long as the pump is used as outlined in the operating instructions, long, trouble-free performance can be expected. To maintain this performance, it is absolutely essential that dirt and other foreign matter be kept out of the system as this is the most common cause of hydraulic system failure. Therefore, when opening up the pump for any reason, such as making pipe connections or for repair, be sure to exercise extreme care in cleanliness and to use clean tools and cloths. If any time dirt is suspected to have found its way into the system, the entire oil system should be flushed as follows:

GREENLEE® 915-PS HYDRAULIC POWER PUMP

DRAINING OIL RESERVOIR

Unscrew Pipe Plug, Key No. 39, from top of reservoir. Tip pump and pour oil from reservoir.

1. Drain oil from reservoir.
2. Fill reservoir with any recommended flushing oil or clean kerosene and operate pump. Work the control handle back and forth several times during flushing to wash all foreign particles from the control valve unit.
   NOTE: Do not operate pump for a very long time as system is not designed to operate with flushing oil or kerosene.
3. Drain flushing oil or kerosene from reservoir and refill with new oil.

MOTOR MAINTENANCE

The 915-PS pump motor when in need of repairs should be done by the manufacturers of the motor or at one of the qualified service stations.

CORRECTING MINOR HYDRAULIC TROUBLES

If any out of the ordinary performance and unusual noises should occur, shut off pump and take corrective steps immediately to avoid possible expensive repairs later on.

Some of the most common minor troubles and their remedies are listed below.

TROUBLE CHART

TROUBLE	CAUSE	REMEDY
Improper advance or return.	Air in circuit, oil supply low. Dirt in system causing valves to lock open.	Run Unit to work out air; add oil. Flush out entire oil system (page 3) and fill with new oil.
Unable to reach pressure.	Same as above. If trouble is not cleared up by above remedies, trouble may be due to a dirty or plugged up intake screen.	Same as above. Drain oil (see above). Next, remove pump from the reservoir and clean or replace screen, Key No. 18. CAUTION: Do not operate pump without screen as particles of dirt will be sucked into pump and valve mechanisms, seriously damaging valve seats.
Necessary to add oil often.	Oil leaks.	Check for broken lines, loose fittings or connections.
Noise in hydraulic system.	Low in oil; air in system.	Add oil (see above). Run pump to work out air.

If the above corrective measures fail to make the pump function properly, it is recommended that you send the pump back to the factory or to a qualified service station. Under no conditions allow unqualified personnel to attempt to repair the pump, particulary the pump block unit or control valve unit, as serious, irrepairable damage may result.

GREENLEE® 915-PS HYDRAULIC POWER PUMP

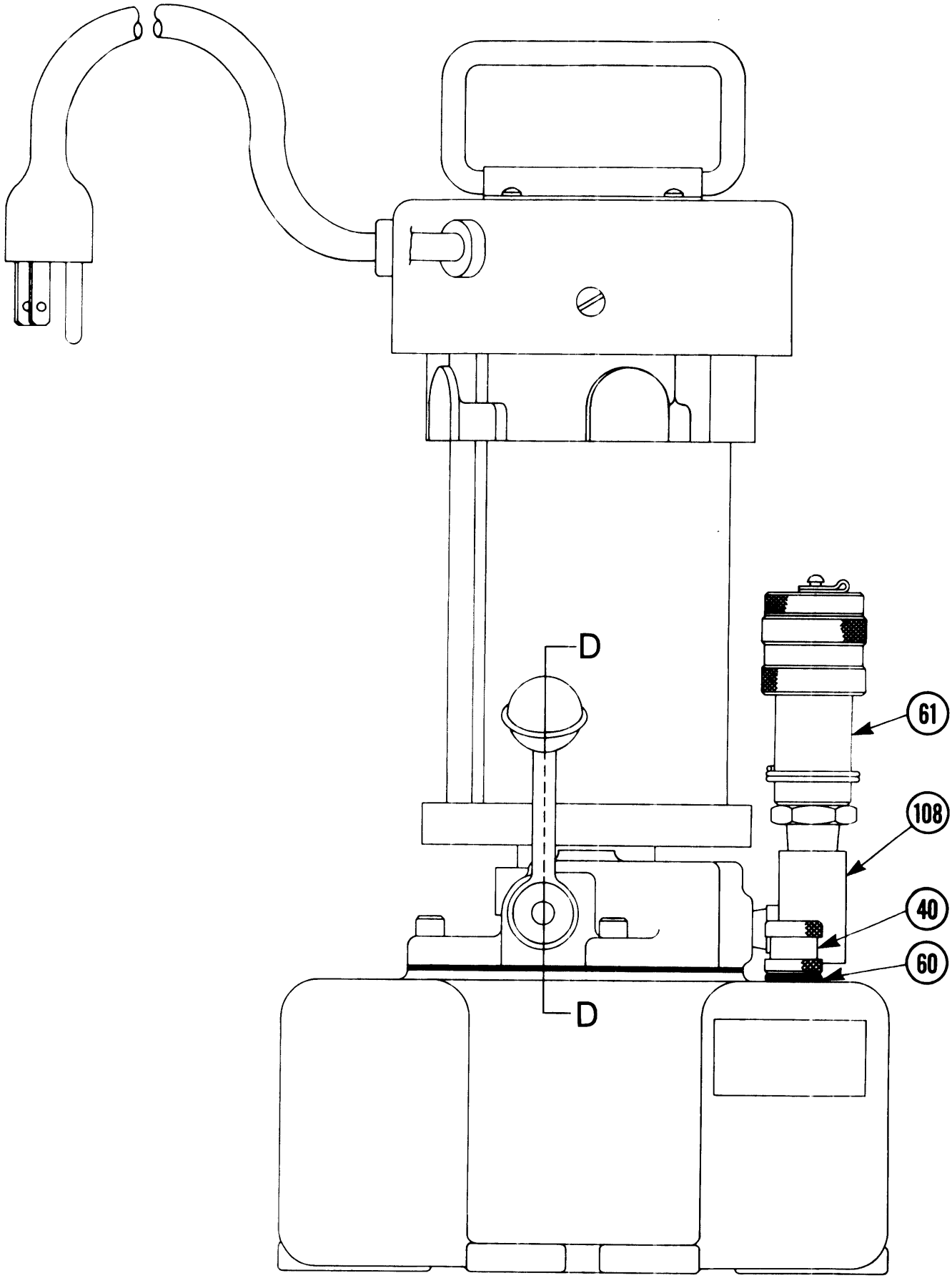

GREENLEE® 915-PS HYDRAULIC POWER PUMP

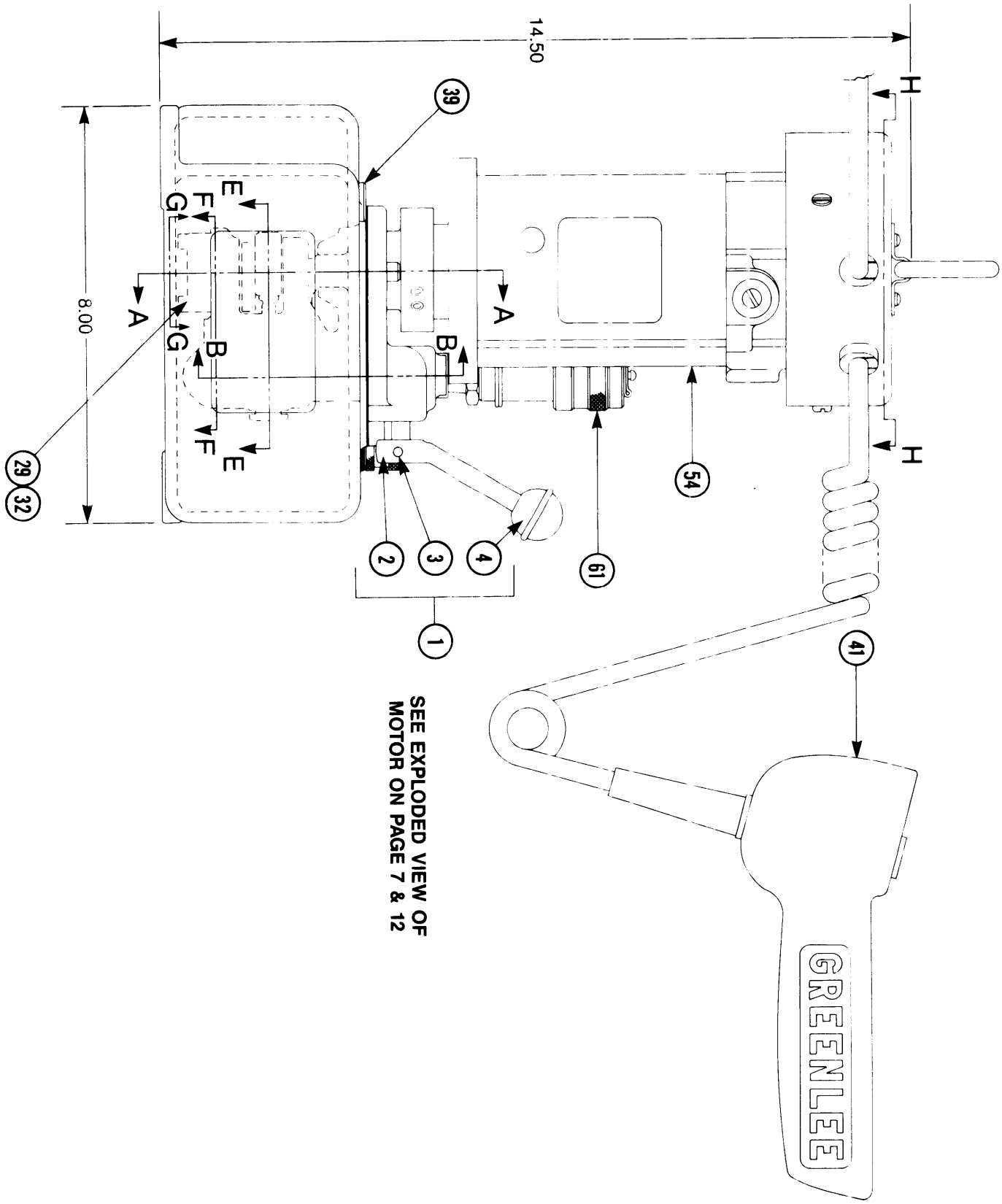

SEE EXPLODED VIEW OF MOTOR ON PAGE 7 & 12

GREENLEE® 915-PS HYDRAULIC POWER PUMP

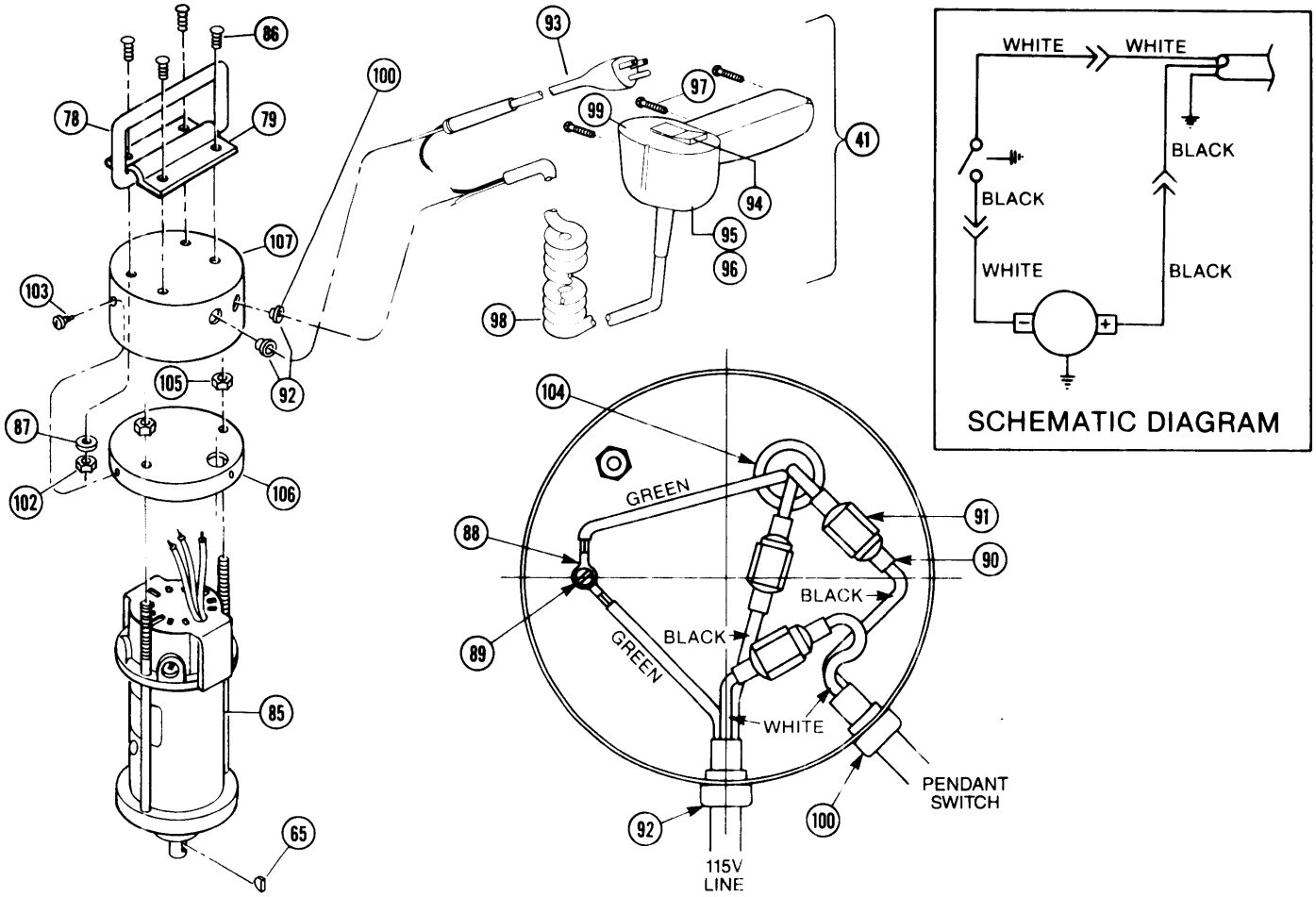

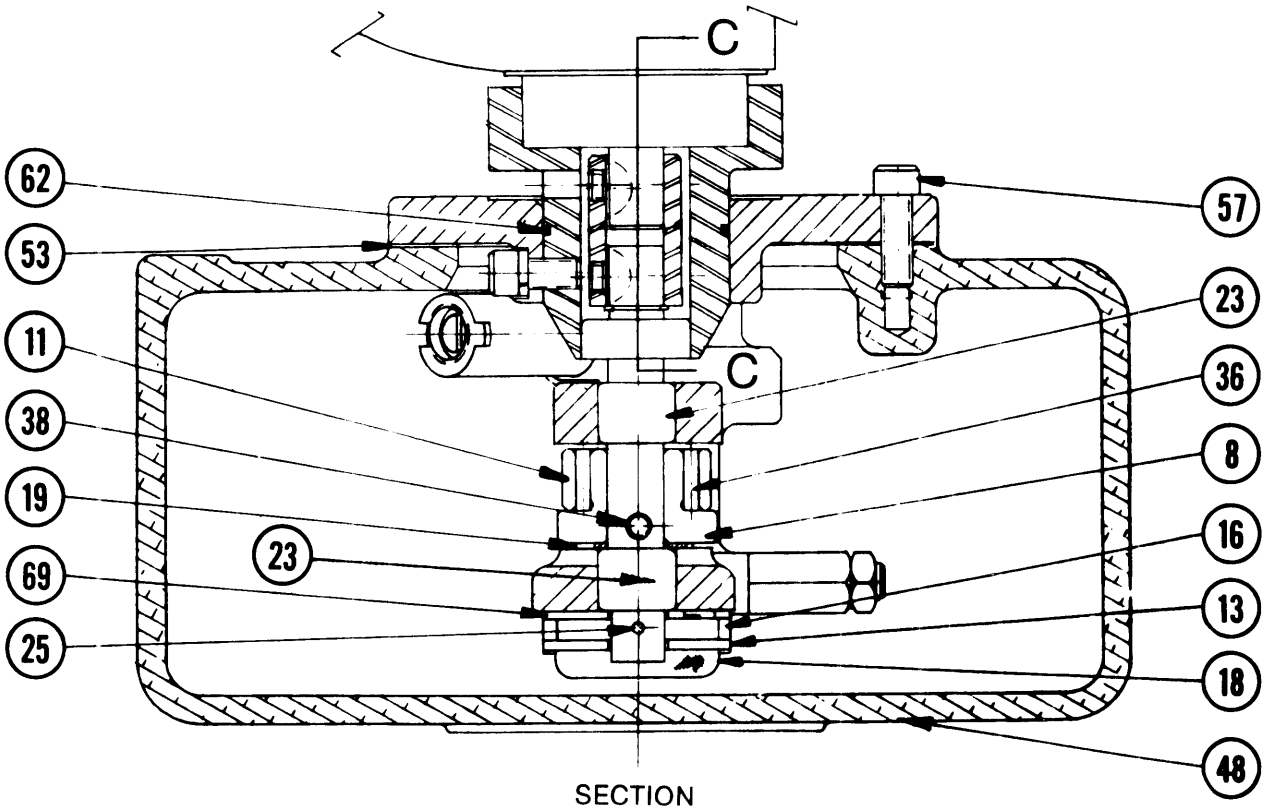

SECTION
A-A

GREENLEE® 915-PS HYDRAULIC POWER PUMP

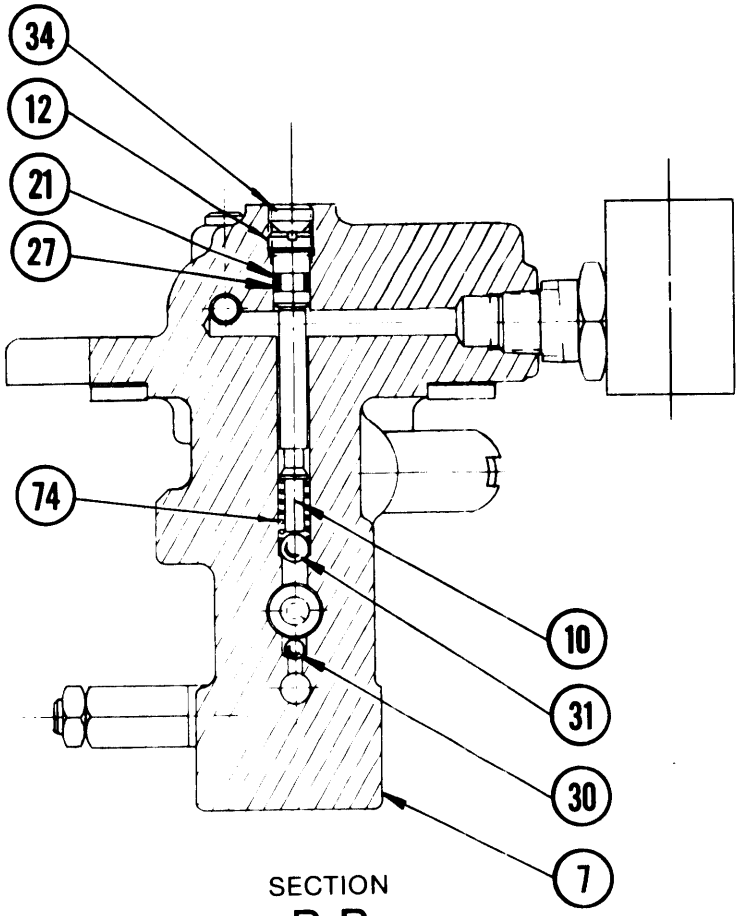

SECTION
B-B

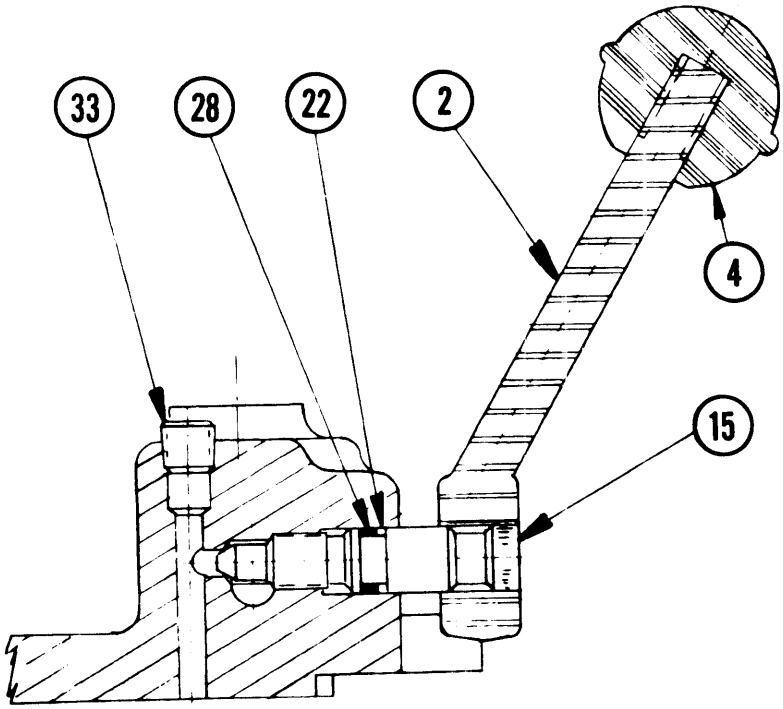

SECTION
D-D

GREENLEE® 915-PS HYDRAULIC POWER PUMP

SECTION
C-C

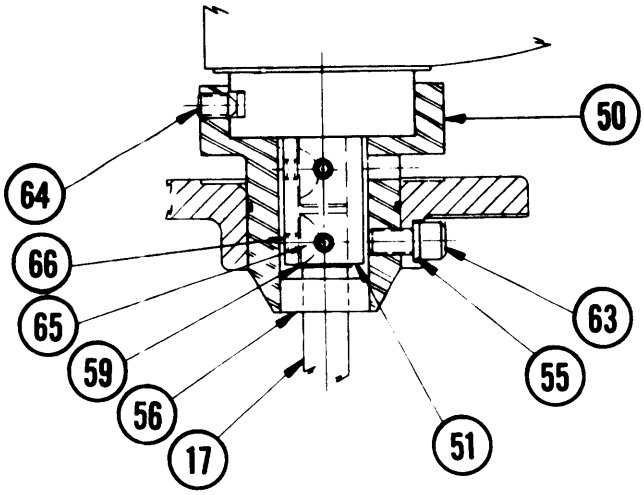

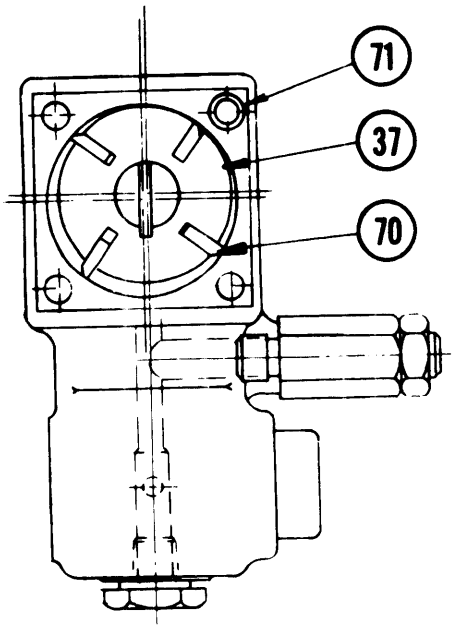

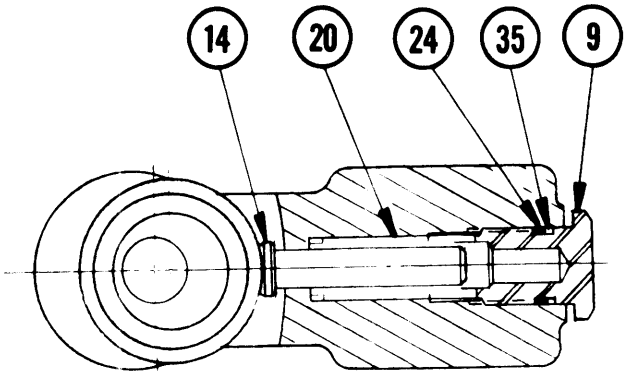

SECTION
E-E

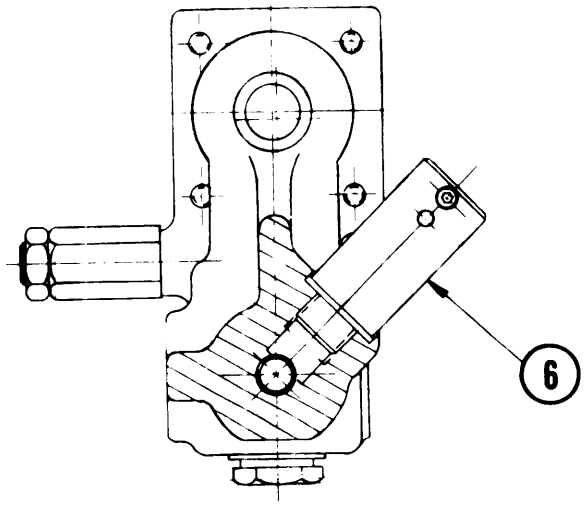

SECTION
G-G

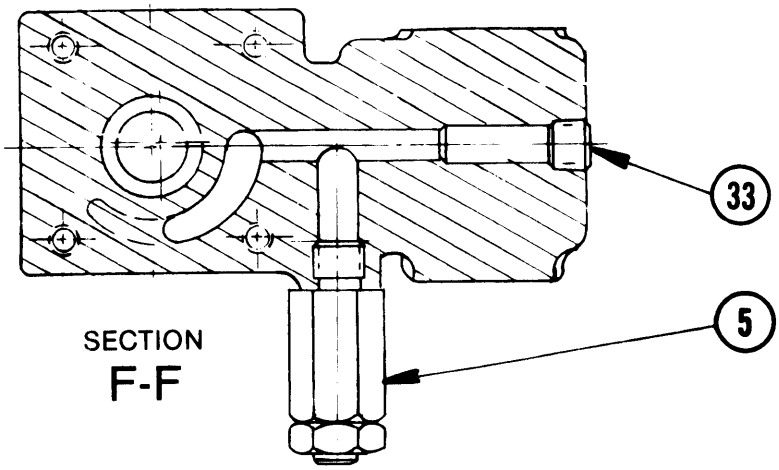

SECTION
F-F

GREENLEE® 915-PS HYDRAULIC POWER PUMP

PARTS LIST

915-PS-M3 HYDRAULIC PUMP
(Control No. 501 6485.6)

When Ordering Parts Give Serial No. of Pump

KEY NO.	CONTROL NO.	DESCRIPTION	QTY.
A	**501 7034.1**	Block Unit, Pump (Includes Key Nos. 1 thru 38; 50, 51, 55, 56, 59, 62, 63, 65, 66, 69, 70, 71 & 74)	1
1	**501 3550.3**	Handle Unit, Control (Includes Key Nos. 2, 3 & 4)	1
2	**501 3553.8**	Handle, Control	1
3	**905 0063.6**	Screw, No. 10-24 UNC x 5/16 Half Dog Pt. Skt. Set	1
4	**905 0242.6**	Control Ball, 1" Dia. Red	1
5	**501 4133.3**	Valve Unit, Relief	1
6	**502 0852.7**	Valve Unit, Relief	1
7	**501 3168.0**	Block, Pump	1
8	**501 2179.0**	Collar, Eccentric	1
9	**501 2182.0**	Plug, Plunger	1
10	**501 7573.4**	Pin, Ball Stop	1
11	**501 2687.3**	Ring, Bearing	1
12	**501 7574.2**	Screw, Adjusting	1
13	**501 7131.3**	Plate, Bottom	1
14	**501 3632.1**	Plunger, High Pressure	1
15	**501 4416.2**	Shaft Control	1
16	**501 4490.1**	Plate, Pump	1
17	**501 5630.6**	Shaft, Drive	1
18	**501 3179.6**	Screen, Intake	1
19	**905 1469.6**	Washer, Thrust	1
20	**501 6826.6**	Bushing	1
21	**905 0055.5**	Ring, 3/16 x 5/16 Back-up	1
22	**905 3853.6**	1/4" Back-up Ring	1
23	**905 0057.1**	Bearing, 7/16 x 5/8 x 1/2 x Long Needle	2
24	**905 1384.3**	O-Ring, 3/8 x 1/2 x 1/16 (Replaces 905 0168.3)	1
25	**905 3280.5**	Pin, 3/32 x 1/2 Dowel	1
27	**905 0388.0**	O-Ring, 3/16 x 5/16 x 1/16	1
28	**905 0418.6**	O-Ring, 1/4 x 3/8 x 1/16	1
29	**905 0573.5**	Screw, No. 8-32 UNC x 3/4 Skt. Hd. Cap	4
30	**905 0678.2**	Ball, 3/16 Steel	1
31	**905 0679.0**	Ball, 1/4 Steel	1
32	**905 0685.5**	Washer, No. 8 Lock	4
33	**905 0824.6**	Plug, 1/16 Skt. Pipe	2
34	**905 0851.3**	Screw, 3/8-24 UNF x 3/16 Hollow Lock	1
35	**905 0883.1**	Ring, 3/8 x 1/2 Back-up	1
36	**905 0931.5**	Bearing, 3/4 x 1 x 1/2 Long Needle	1
37	**501 7134.8**	Rotor	1
38	**905 1354.1**	Pin, 3/16 x 7/8 Roll	1
39	**905 0733.9**	Pipe Plug, 1/2" Socket Hd.	1

GREENLEE® 915-PS HYDRAULIC POWER PUMP

PARTS LIST

915-PS-M3

(Control No. 501 6485.6)

When Ordering Parts Give Serial No. of Pump

KEY NO.	CONTROL NO.	DESCRIPTION	QTY.
*40	**501 5689.6**	Dip Stick Unit / Reservoir Vent	1
41	**503 2363.6**	Switch, Pendent Includes Key Nos. 94 thru 99 (Replaces 501 6680.6, 501 8958.1 & 502 0666.4)	1
48	**501 5703.5**	Reservoir	1
50	**501 5704.3**	Adaptor, Motor	1
51	**501 5803.1**	Adaptor, Drive Shaft	1
53	**501 5643.8**	Gasket, Reservoir	1
54	**503 1452.1**	Motor, Unit Includes Key Nos. 41 and 78 thru 101	1
55	**905 0026.1**	Washer, 1/4 Hi-Collar Lock	1
56	**905 0174.8**	Seal, 7/16 ID x 7/8 OD x 5/16 Wide, Oil	1
57	**905 0176.4**	Screw, 1/4-20 UNC x 3/4 Sk. Hd. Cap	3
59	**905 0435.6**	Ring, Retaining	1
60	**905 0387.2**	O-Ring, 7/16 x 5/8 x 3/32	1
61	**905 0807.6**	Quick-coupler, 3/8 Female Half	1
62	**905 0839.4**	O-Ring, 1-3/8 x 1-1/2 x 1/16	1
63	**905 0849.1**	Screw, 1/4-28 UNF x 1/2 Skt. Hd. Cap	1
64	**905 1480.7**	Screw, 1/4-28 UNF x 3/8 Cup Pt. Skt. Set	2
65	**905 1168.9**	Key, Woodruff	2
66	**905 1374.6**	Screw, No. 10-32 UNF x 1/8 Skt. Jam	4
69	**501 7130.5**	Plate, Top	1
70	**501 7132.1**	Vane	4
71	**501 7468.1**	Dowel, Hollow	1
74	**500 3914.8**	Spring, Compression	1
75	**905 0806.8**	Oil	1 Qt. Can
76	**905 1059.3**	Oil	1 Gal. Can
78	**502 8903.9**	Lifting Handle	1
79	**502 8904.7**	Handle Bracket	1
85	**503 1401.7**	Motor 115 V.	1
	503 1389.4	Motor 220 V.	1
86	**905 1440.8**	Screw No. 8-32 UNC Rd. Hd. Mach.	4
87	**905 2555.8**	Washer	4
88	**918 6137.3**	Terminal - Ring Tongue	1
89	**905 2240.0**	Screw No. 6 x 3/8 Sheet Metal (Pan Hd.)	1
90	**918 6135.7**	Insulated Lug - Female	3
91	**918 6134.9**	Insulated Lug - Male	3
92	**918 6021.0**	Bushing, Motor Cord	1
93	**918 6138.1**	Power Cord	1
94	**918 6265.5**	Switch, Rocker	1
95	**503 1902.7**	Housing, R. H.	1
96	**503 1901.9**	Housing, L. H.	1
97	**905 3441.7**	Screw, Housing #6-20 x 5/8	3
98	**503 2362.8**	P.S. Cord, #18/2 Coiled	1
99	**503 2370.9**	Decal, Switch Faceplate	1
100	**918 6277.9**	Bushing, P.S. Cord	1

*NOTE: Key No. 40 is to be loosened to vent reservoir.

GREENLEE® 915-PS HYDRAULIC POWER PUMP

KEY NO.	CONTROL NO.	DESCRIPTION	QTY.
102	**905 0633.2**	Nut No. 8-32 UNC Hex	4
103	**905 1106.9**	Screw No. 10 x 1/2 Sheet Metal	3
104	**918 6136.5**	Bushing	1
105	**905 3345.3**	Nut No. 10-24 UNC - Nyloc Hex	2
106	**503 1400.9**	Motor Cover Support	1
107	**503 1390.8**	Cover	1
108	**905 3344.5**	Elbow, Street - 1/4 Male x 3/8 Female	1
		OPTIONAL PARTS	
	501 8415.6	Kit, Packing Repair (Includes Key Nos. 19, 21, 22, 27, 28, 30, 31, 53, 56, 62, 73, 74)	
	502 4780.8	Caster Set	
	503 1451.3	Motor Unit, Replacement 115 V. (Includes Key Nos. 41, 78, 79, 85 through 93, 102 through 107)	
	503 1408.4	Motor Unit, Conversion 115 V. (Includes Key Nos. 78, 79, 85 through 93, 102 through 107)	
	503 1457.2	Motor Unit, Replacement 220 V. (Includes Key Nos. 41, 78, 79, 85 through 93, 102 through 107)	
		MOTOR PARTS BREAKDOWN	
109	**918 6189.6**	115 V, 230 V Endplate, Output	1
110	**918 6191.8**	115 V Brg. Assembly, Arm.	1
	918 6238.8	230 V Brg. Assembly, Arm.	1
111	**918 6192.6**	115 V, 230 V Stud	2
112	**918 6193.4**	115 V, 230 V Housing Assembly	1
113	**918 6194.2**	115 V, 230 V Washer, Finger	1
114	**918 6195.0**	115 V, 230 V Bell Assembly, Comm. End*	1
115	**918 6196.9**	115 V, 230 V Nut	2
116	**918 6197.7**	115 V, 230 V Washer	2
117	**918 6198.5**	115 V, 230 V Brush	2
118	**918 6199.3**	115 V, 230 V Cap, Brush	2

*Includes Rectifier

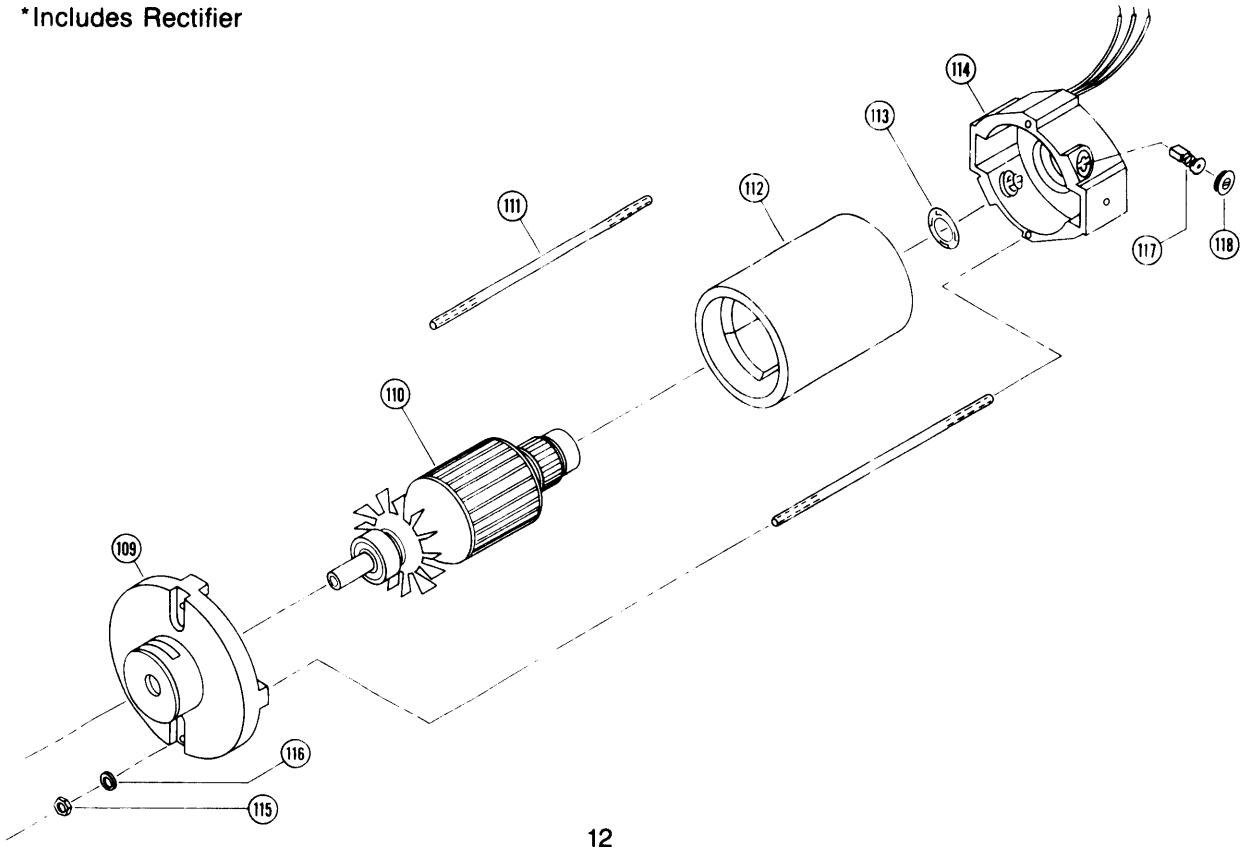

GREENLEE® 915-PS HYDRAULIC POWER PUMP

TROUBLE SHOOTING & REPAIR GUIDE

For 915 Manual & Pilot Operated Control Pumps
915, 915-PS & 915-PO Models

If the corrective measures outlined in the trouble shooting chart fail to correct the pump malfunction, the following procedures may be performed by qualified hydraulic repair personnel.

For trouble shooting and repair purposes the above pumps consist of four (4) basic systems.

1. Motor and Drive Shaft Mechanism
2. Low Pressure Pump System
3. High Pressure Pump System
4. Manual or Pilot-Operated (PO) Directional Control System (Tank Shut Off)

The above systems consist of the following parts and related hardware.

MOTOR AND DRIVE SHAFT MECHANISM

Motor and motor control, shaft adapter, drive shaft, shaft seal, shaft bearings, eccentric collar, eccentric bearing, bearing ring, and rotor drive pin.

LOW PRESSURE PUMP SYSTEM

Intake screen, bottom plate, pump plate, rotor, vanes, top plate, hollow dowel, and low pressure relief valve.

HIGH PRESSURE PUMP SYSTEM

3/16" high pressure intake check ball, high pressure plunger, plunger bushing, plunger plug, 1/4" high pressure discharge check ball, discharge check spring, discharge check ball stop pin, stop pin adjusting screw, lock screw, and high pressure relief valve.

DIRECTIONAL CONTROL VALVES (TANK SHUT OFF) MANUAL CONTROL

Control shaft and handle unit.

PILOT OPERATED CONTROL VALVE

Pressure operated plunger assembly, lever assembly, seal pin, and seal pin holder.

TROUBLE SHOOTING GUIDE

TROUBLE	SYSTEM	COMPONENTS OR FEATURE
Slow rapid advance.	Low Pressure Pump	Screen, plates, rotor, vanes, or low pressure relief valve.
Unable to reach pressure or slow Hi-P travel.	High Pressure	Plunger and bushing fit, check valve seats, stop pin adjustment, and high pressure relief valve.
	Directional Valve	Control shaft seat (manual), seal pin seat (P.O.)
	Low Pressure Pump	P.O. Models - pressure too low (low pressure relief valve) to seat seal pin.
Slow retraction.	Directional Valve	Manual Models - valve seat too deep or too little shaft rotation. P.O. Models - Lever return spring or lever setting.

GREENLEE® 915-PS HYDRAULIC POWER PUMP

DISASSEMBLY PROCEDURE

Remove reservoir from pump - (3) 1/4"-20 x 3/4 Skt. Hd. Screw

MOTOR REMOVAL

Rotate drive shaft to align two (2) #10-32 set screws in shaft adapter (at 90° with each other) with access hole in motor adapter for removal. Remove two (2) 1/4"-28 set screws from motor adapter and remove motor.

LOW PRESSURE PUMP SYSTEM REMOVAL

Remove low pressure relief valve. Removal of four (4) #8-32 x 3/4 skt. head cap screws and lock washers allows disassembly of the remaining parts; screen, bottom plate, pump plate, rotor, vanes, hollow dowel, rotor drive pin and top plate.

DRIVE SHAFT MECHANISM REMOVAL

Rotate drive shaft to check shaft bearings for smooth operation without excessive looseness. Remove eccentric drive pin (3/16 x 7/8 roll pin) and push shaft with adapter up from block. Motor adapter with shaft oil seal can now be removed by removing 1/4"-28 x 1/2 skt. head cap screws.

HIGH PRESSURE PUMP SYSTEM REMOVAL

Note! Motor and drive shaft must be removed before plunger, bushing, and 3/16 intake check ball can be removed.

Remove plunger plug, plunger, plunger bushing, and 3/16" intake check ball. Remove high pressure relief valve, 3/8-24 lock-screw, adjusting screw, stop pin, check spring, and 1/4" discharge check ball.

DIRECTIONAL CONTROL VALVE REMOVAL

Manual Control - Remove control shaft handle and control shaft.

Pilot Operated Control - Remove lever pivot pin (1/8 x 3/4 roll pin), lever assembly, seal pin and holder, and P.O. plunger assembly. Remove ball and spring from P.O. plunger by removing 3/32 x 1/2 roll pin.

Clean and inspect all parts for excessive wear - replace as necessary. Replace all seals, packing, balls and springs. Check all valve seats and reseat with new balls. Badly worn or damaged seats may be reworked by redrilling. Remove a small amount (.010) at a time until a good seat is produced. See page 15 for proper drill sizes. Check relief valves for proper setting. Low pressure valve cannot be checked in pump. High Pressure valve can be checked in pump if high pressure system is working properly. Remember to loosen lock screw. Each clockwise turn will increase pressure about 3000 PSI.

REASSEMBLY

Reassemble in reverse order taking note of the following:

Coat all seals with oil before assembly.

DIRECTIONAL CONTROL VALVE

Manual Control - Check to insure the control handle is positioned so shaft can be firmly seated in block.

Pilot Operated Control - Depress lever at seal pin end to seat pin and adjust #8-32 x 1/2 set screw to allow 1/8" clearance between lever and P.O. plunger - tighten lock nut.

HIGH PRESSURE PUMP SYSTEM

Remember to install 3/16" ball before plunger bushing and that ball, bushing, and plunger must be assembled before drive shaft. Set ball stop pin by turning adjusting screw down tight and back off 1/2 turn (.021), lock in place with set screw.

DRIVE SHAFT MECHANISM

Use loctite CV on threads of 1/4-28 x 1/2 skt. head cap screw when assembling motor adapter.

LOW PRESSURE PUMP SYSTEM

Make sure "V" groove in rotor is to bottom of pump. Refer to parts breakdown illustration to make certain vanes are installed properly - leading edge of vane in direction of rotation - CCW from bottom of pump.

Make certain there are no gaps between intake screen and bottom plate. Before tightening the #8-32 x 3/4 pump mounting screws (to 25-30 inch pounds) push pump plate toward shaft at discharge port.

MOTOR

Use loctite CV on threads of two (2) #10-32 set screws in shaft adapter.

RESERVOIR

Drain, clean, and refill reservoir with Greenlee hydraulic oil. Use a new gasket and mount pump to reservoir.

GREENLEE® 915-PS HYDRAULIC POWER PUMP

PUMP BLOCKS FOR 915 PS

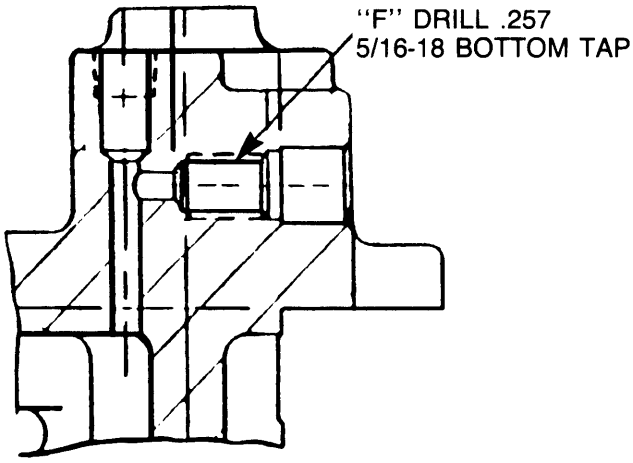

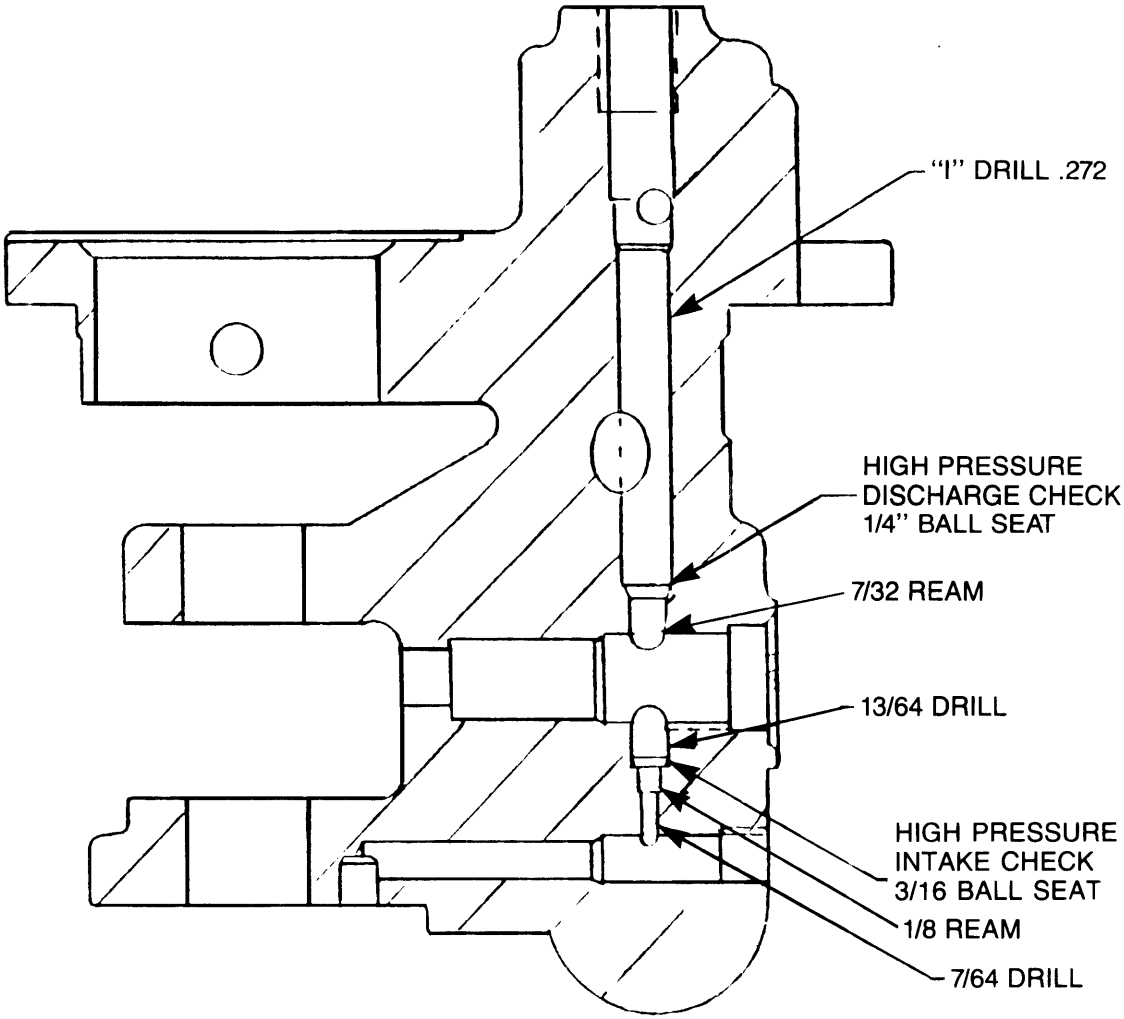

GREENLEE TEXTRON

Greenlee Textron Inc. / Subsidiary of Textron Inc.
4455 Boeing Drive, Rockford, IL 61109-2988 USA
USA: 800/435-0786, Canada: 800/233-5924
Telex: 4330029 GTCRKD, Fax: 815/397-1865
Service: 800/435-2932