Current Tools

FOR THE PROFESSIONAL ELECTRICIAN

Model 33 Mobile Cable Puller

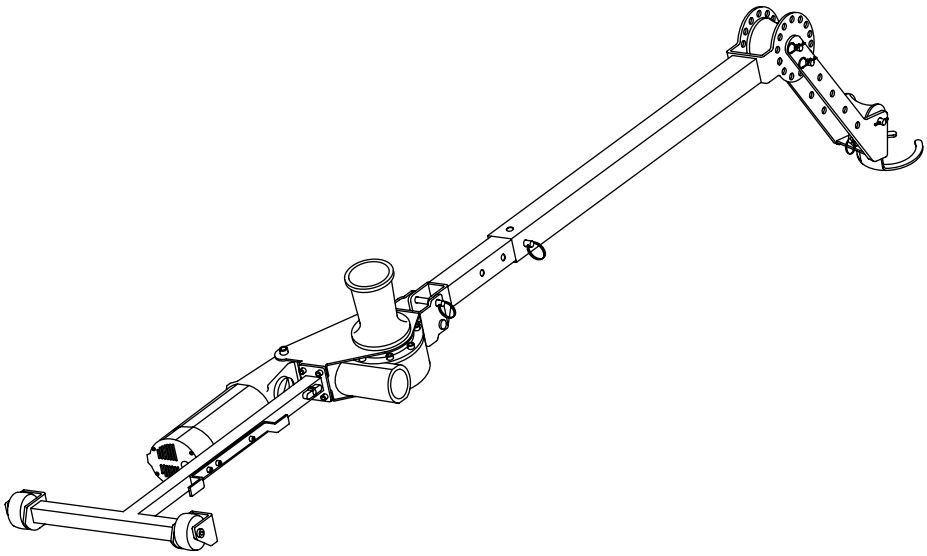

Operating, Maintenance, Safety and Parts Manual

04/09 REV. 3

Read and understand this material before operating or servicing the Cable Puller. Failure to understand how to safely operate and service this unit may result in serious injury or death.

This manual is free of charge. All personnel who operate the Cable Puller should have a copy of this manual and read and understand its contents. To request a copy of this manual or replacement safety decals, or for technical assistance, call or write to the address below.

CURRENT TOOLS • P. O. BOX 17026 GREENVILLE, SC 29606
800.230.5421 or 864.244.1201 • FAX 864.244.5860
www.currenttools.com

TABLE OF CONTENTS

Safety Alerts 3

Important Safety Information 4, 5

Specifications 6

Features 6

Set-Up and Operating Instructions 7-10

Common Set-Ups 11

Maintenance 12

Exploded View 13

Parts List 14, 15

Wiring Drawing 15

Safety Alert Symbol

THIS SAFETY SYMBOL is used to call your attention to instructions that concern your personal safety. It means: ATTENTION! BE AWARE! THIS IS AN IMPORTANT SAFETY INSTRUCTION!

Read, understand, and follow these safety instructions. Failure to follow these safety instructions may result in injury or death.

DANGER

Immediate hazards which, if not avoided, WILL result in serious personal injury or death.

WARNING

Hazards or unsafe practices which, if not avoided, COULD result in serious personal injury or death.

CAUTION

Hazards or unsafe practices which, if not avoided, COULD result in minor personal injury or property damage.

RETAIN SAFETY INFORMATION

This manual should be read and understood by all personnel who operate or service this Cable Puller. Failure to understand how to operate and service this equipment could result in serious injury or death. This equipment should only be operated and serviced by qualified personnel.

IMPORTANT SAFETY INFORMATION

DANGER Do NOT operate cable puller in wet or damp locations. Do NOT expose to rain.

DANGER Do NOT operate in an explosive atmosphere.

WARNING Do NOT use near energized circuits.

WARNING Do NOT use cable puller as a hoist or for lifting, supporting or transporting people or loads. Use only for its intended purpose as a cable puller.

WARNING Do NOT wrap rope around any body parts. Do NOT wrap rope around wrists. Hold rope so that it may be released quicky.

WARNING ALWAYS keep rope away from operator's feet.

WARNING Do NOT exceed load rating of cable puller, rope, or accessories.

WARNING ALWAYS inspect rope before each use.

WARNING ALWAYS disconnect cable puller before servicing.

WARNING ALWAYS plug the Model 33 Cable Puller into a grounded receptacle with a 15 amp GFCI protected circuit. Do NOT modify the plug provided with the Model 33 Cable Puller.

WARNING ALWAYS insure cable puller is properly secured to conduit and all pins are in place before operating.

WARNING Pulling Rope should be the only thing to contact the capstan. NEVER let swivels, grips, etc. come in contact with the capstan.

WARNING Rope must ALWAYS be pulled over a rotating sheave. If a sheave does not rotate, turn cable puller off immediately and determine problem before continuing the pull.

WARNING Set up the cable puller so that pulling rope ALWAYS contacts the main roller.

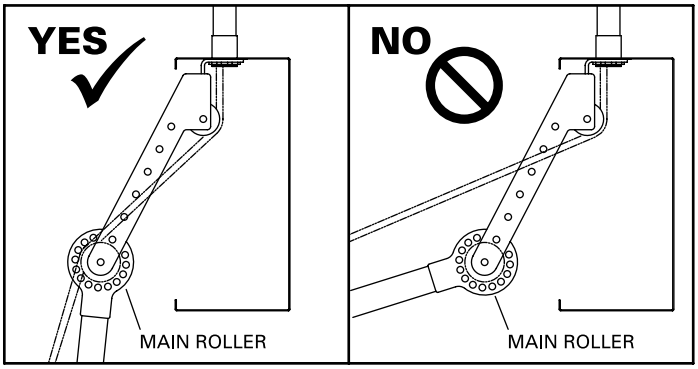

⚠WARNING	ONLY use 9/16” or larger double-braided composite pulling rope with an average breaking strength of 16,000 lbs.
⚠WARNING	NEVER allow the rope to slip on a rotating capstan for more than a couple of seconds. The rope will wear in that spot and the rope could break under pressure.
⚠WARNING	Keep all body parts, hair, loose clothing, etc. away from rotating parts and pinch points. Keep hands away from capstan.
⚠WARNING	Do NOT allow the rope to overlap on the capstan. If this condition begins to occur, immediately release the tailing force on the rope. If this does not remedy the overlap, stop the puller and run the puller in reverse to unwind the overlap.
⚠WARNING	During the pull, all personnel must stand to the side of the cable puller and out of the direct line of tight pulling rope.
⚠WARNING	The cable puller must be attached to steel or schedule 40 PVC conduit only. When attached to PVC conduit, the conduit MUST be supported within 2” of the end.
⚠WARNING	ALWAYS inspect pins to be sure they are fully inserted through holes and have spring clips properly attached. Do NOT substitute any other object for factory supplied pins.
⚠WARNING	When making a vertical cable pull, keep the area underneath the cable pull clear of all personnel.
⚠WARNING	Keep fingers away from adjustment holes and pivoting parts. Fingers can be severed by pivoting parts.
⚠CAUTION	Do NOT alter this cable puller. Doing so will void the warranty. Guards and safety features are provided for your protection.
⚠CAUTION	Wear eye protection when operating cable puller.
⚠CAUTION	Inspect all components of the cable puller before beginning any cable pull. Replace any worn or defective components.
⚠CAUTION	Be careful during assembly and disassembly of the cable puller. Have control of components before removing any pins.
⚠CAUTION	Do NOT use an extension cord longer than 100 ft. Extension cord should be a minimum of 12 gauge wire with ground.
⚠CAUTION	This cable puller exceeds 50 lbs. and will require more than one person to lift or carry.
⚠CAUTION	The motor, gear box, and capstan may heat up during the pull. Be careful.
⚠CAUTION	ALWAYS pull in the direction of the arrows on top of the capstan.

SPECIFICATIONS

model no.	– 33 Cable Puller
width	– 19”
length	– *folded* – 38”
	– *fully extended* – 104”
height	– *folded* – 16 1/2”
weight	– 75 lbs. – cable puller
	– 6 lbs. – conduit coupling set
maximum pulling force	– 3,000 lbs.
speeds	– no load Low - 22 Ft. / Min. High - 84 Ft. / Min.
motor	– 120 volts AC, 60 hertz, 13 amps
pulling rope	– 9/16” or larger double braided composite pulling rope with an average breaking strength of 16,000 lbs.

FEATURES

- Integral heavy duty 2 speed motor
- Folds for compact transport and storage
- Quick release conduit couplings
- Rolling base for ease of mobility
- Tapered capstan
- Integral foot switch
- Permanently lubricated vent-free gear box
- Light weight – cable puller weighs approximately 75 lbs.

Model 33 Cable Puller shown pinned for transport.

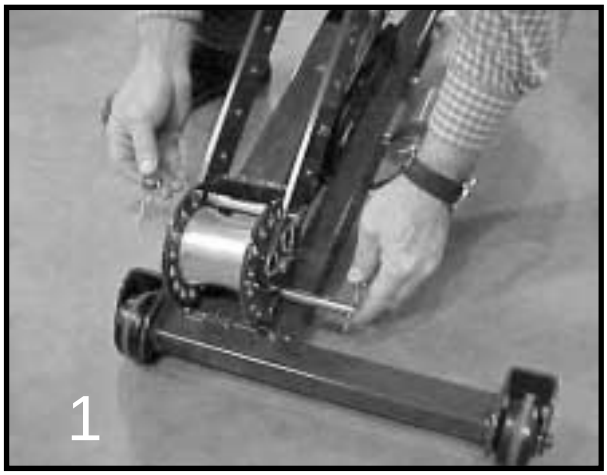

1- Remove transport pin.

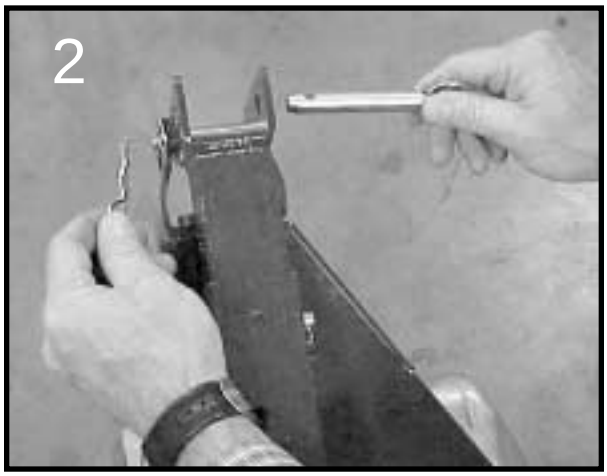

2- Remove pivot tube pin.

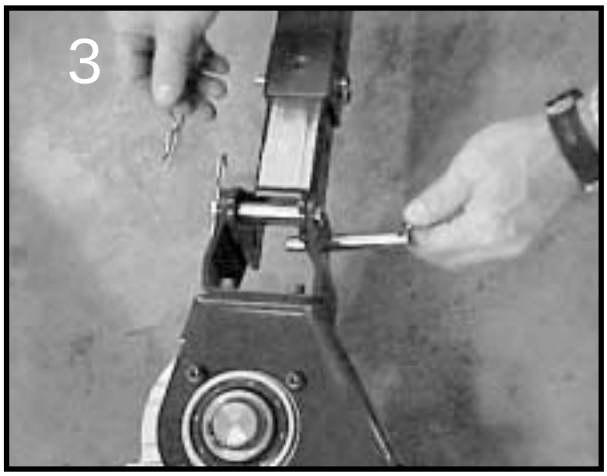

3- Rotate pivot tube until holes align and re-pin.

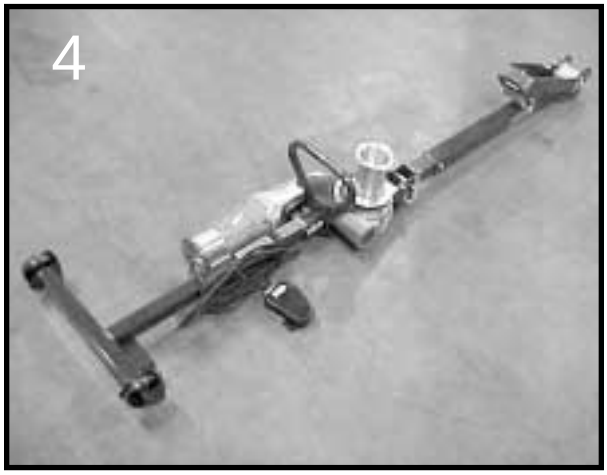

4- Turn cable puller so that capstan faces upward.

5- Unpin and slide the adjustable tube off of the pivot tube.

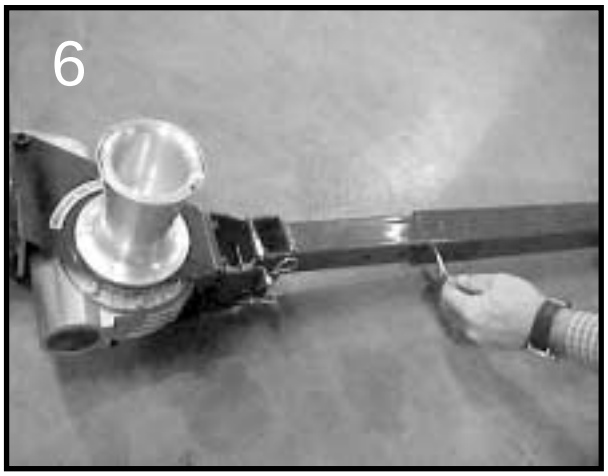

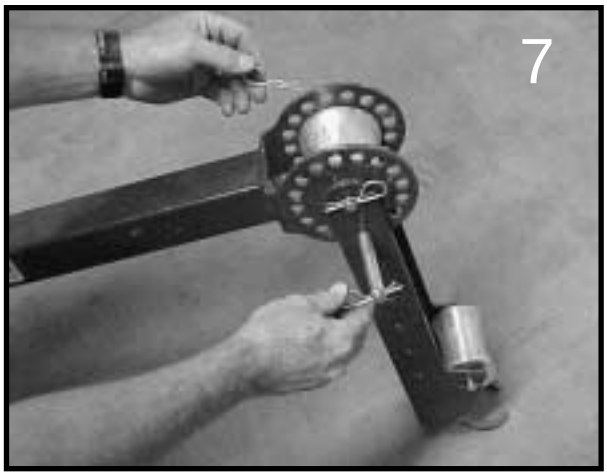

6- Turn the adjustable tube in the direction needed for the type pull (UP, DOWN, SIDE – *See* COMMON SET-UPS *on page 11*.) and slide back onto the pivot tube to the desired length and re-pin.

7- Next, to position the extension arm to the desired angle for the pull, remove the pin that allows the extension arm to be adjusted to various positions and re-pin at desired angle. NOTE: If needed, the extension arm length may be adjusted. *See close-up photo of side pull in* COMMON SET-UPS *on page 11*.

⚠WARNING Set up the cable puller so that pulling rope ALWAYS contacts the main roller.

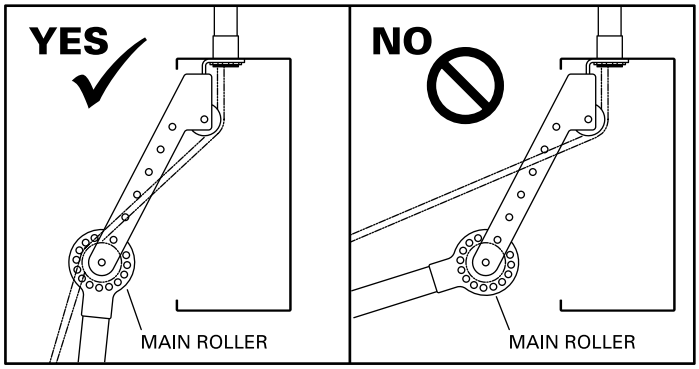

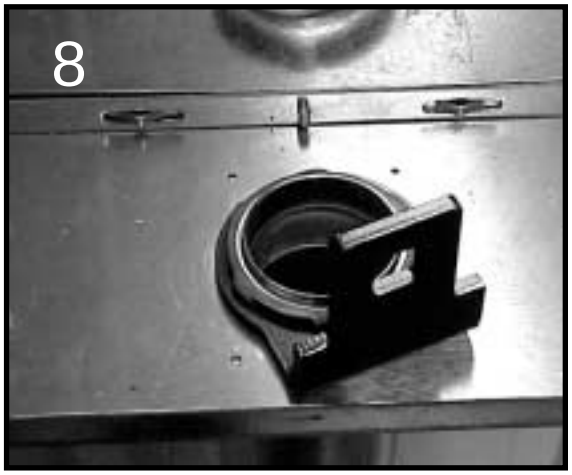

8- Choose the conduit coupling for the size conduit you will be connecting to. Remove the conduit lock nut and place the conduit coupling over the conduit. Then, replace and tighten the conduit lock nut.

9- Next, move the cable puller into position and attach the extension arm onto the conduit coupling. You should hear a "click" as the conduit coupling fits into the extension arm. If extension arm is not at the correct angle to attach to conduit coupling, the angle of the extension arm may be adjusted. Also, the adjustable tube can be repositioned. NOTE: When the cable puller is set-up in the proper pulling position, both lower frame wheel brackets should contact the floor. See photo #10 and Figure 1.

⚠WARNING Keep fingers away from adjustment mount holes and pivoting parts. Fingers can be severed by pivoting parts.

10- Operator may stand on either side of the cable puller. Place the foot switch on the side the operator will be standing. Plug the cord into a 15 amp GFCI protected outlet.

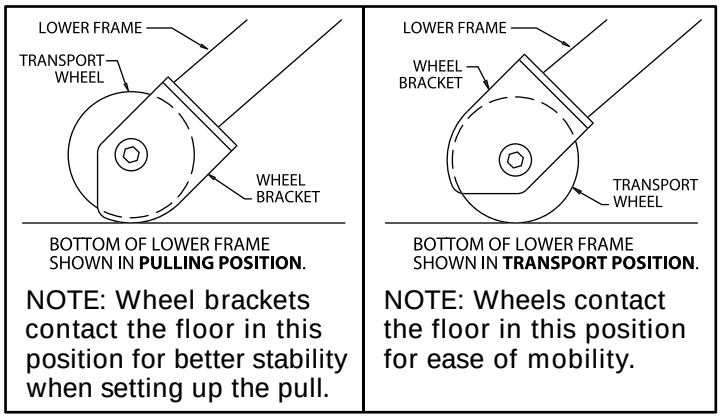

Figure 1 *Figure 2*

11- Turn the FWD/REV switch to the ***forward*** position.

12- Depress the foot switch and check the rotation of the capstan with the pulling rotation decal on the cable puller.

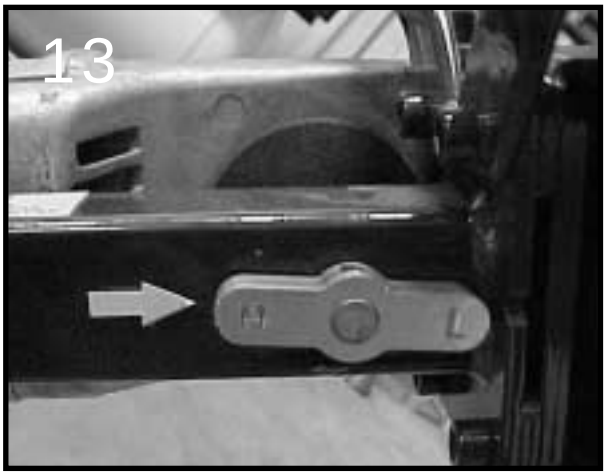

13- Next, turn the High/Low speed switch to the desired position, “H” or “L”.

14- To begin the pull, place 2 to 3 wraps of the pulling rope around the capstan. Depress the foot switch and begin the pull. If the amount of tension (tailing force) you have to put on the pulling rope exceeds approximately 10 lbs., then turn the cable puller off and add one wrap of the pulling rope. Note that if the rope is in a “v” shape as shown in photo 14, the pull for the operator is easier than if pulled at a 90°. (or “L” shape)

15- When the pull is completed, pull the ring on the back of the extension arm to separate the conduit coupling from the extension arm. Loosen the lock nut and remove the conduit coupling.

⚠WARNING NEVER allow the rope to slip on a rotating capstan for more than a couple of seconds. The rope will wear in that spot and the rope could break under pressure.

⚠WARNING Do NOT allow the rope to overlap on the capstan. If this condition begins to occur, immediately release the tailing force on the rope. If this does not remedy the overlap, stop the puller and run the puller in reverse to unwind the overlap.

⚠CAUTION The motor, gear box, and capstan may heat up during the pull. Be careful.

COMMON SET-UPS

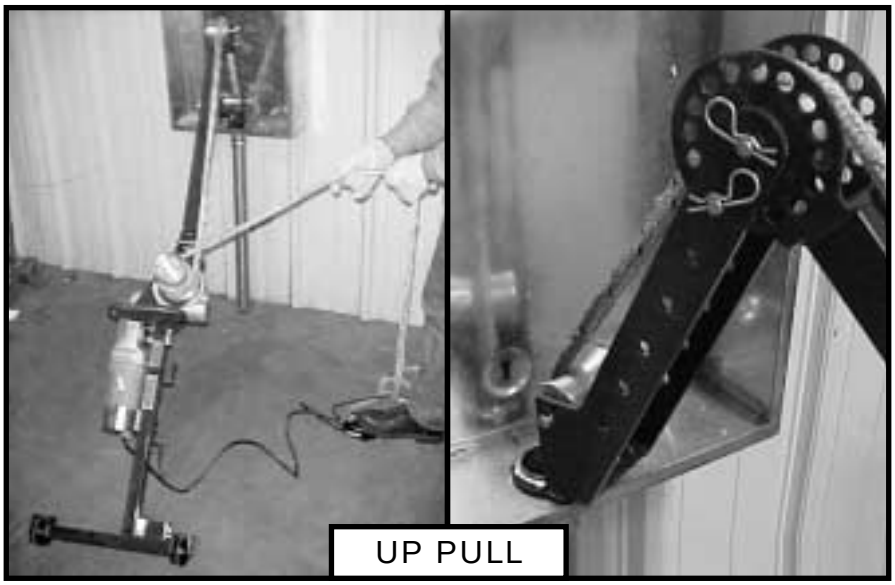

UP PULL

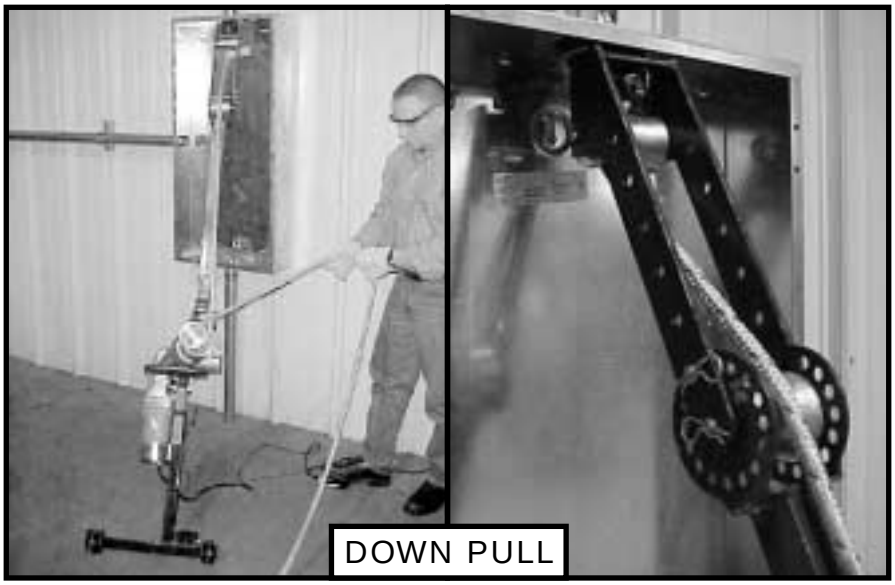

DOWN PULL

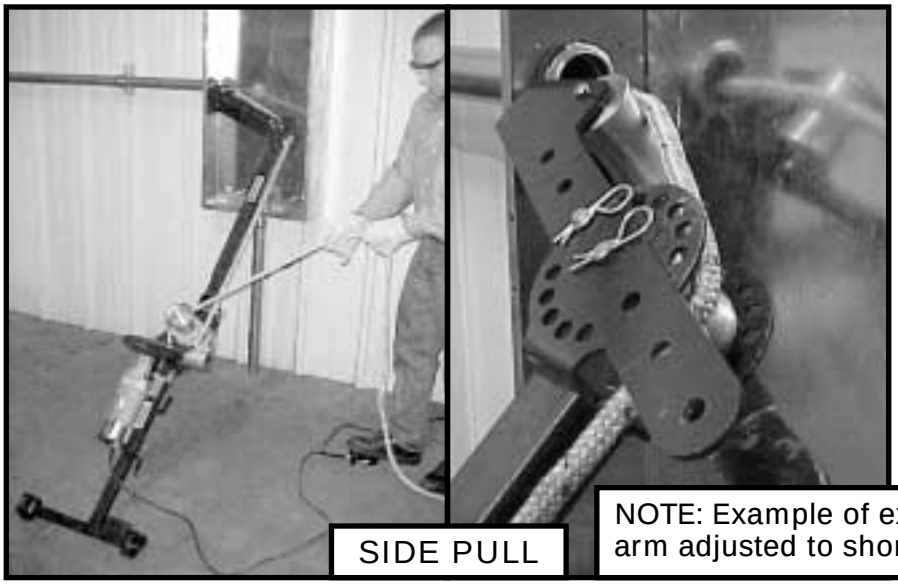

SIDE PULL

NOTE: Example of extension arm adjusted to shorter length.

⚠ WARNING

Unplug the cable puller before servicing.

⚠ CAUTION

Do NOT alter this cable puller. Doing so will void the warranty. Guards and safety features are provided for your protection.

Capstan

Replace the capstan if it is grooved more than 1/16” deep.

Gear Box

The Model 33 Cable Puller has a vent-free gear box and is factory lubricated for life with synthetic, semi-fluid gear lubricant with an operating range of +5°F to +220°F.

Lubrication

Please refer to Milwaukee Electric Tool Corporation Operator’s Manual. A copy is provided with this cable puller. This cable puller uses a Milwaukee Heavy Duty Super Hawg™ MODEL 1680-20.

EXPLODED VIEW

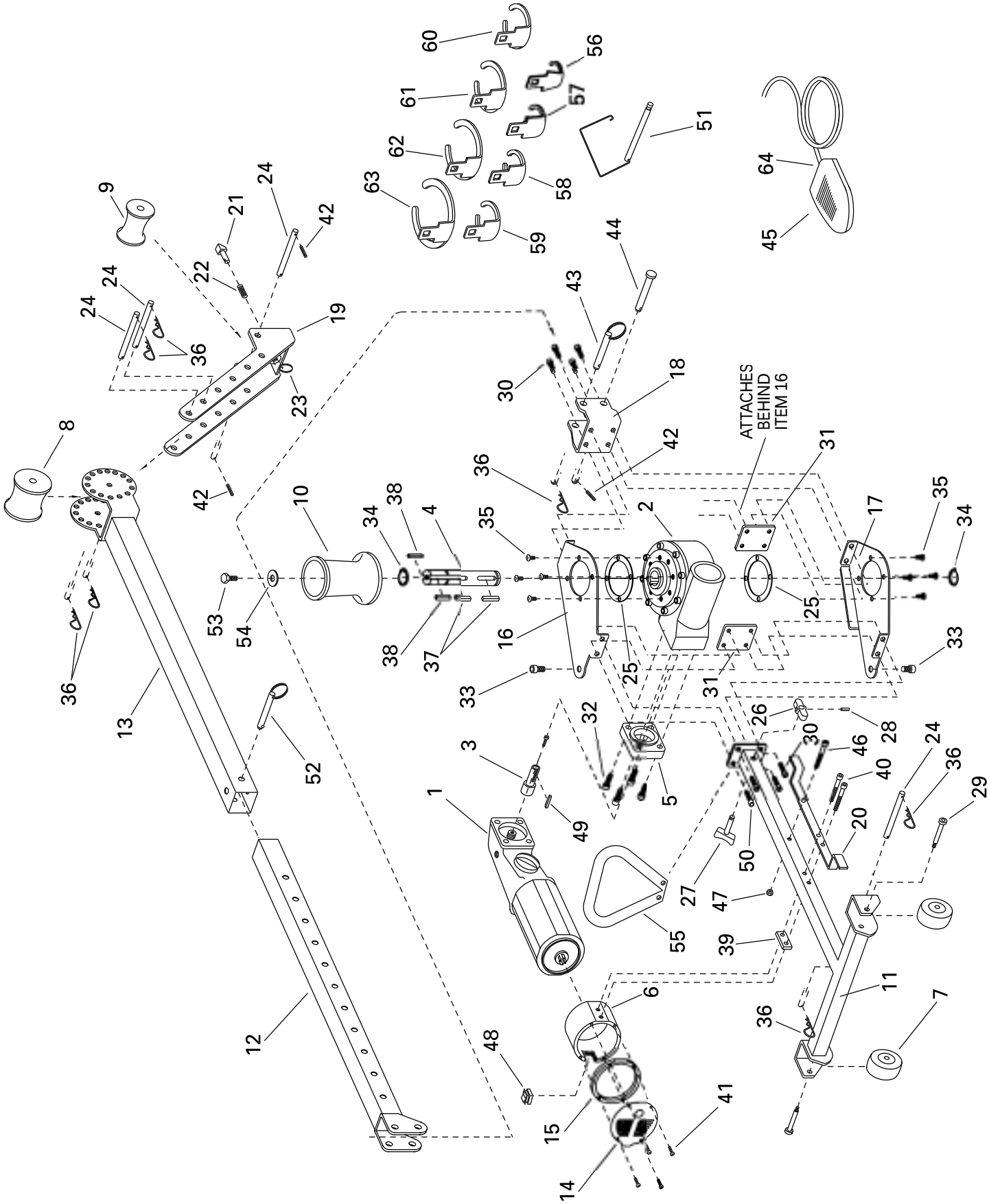

PARTS LIST

Item #	Parts Description	Qty.	Part #
1	Motor	1	33-1
2	Gear Box	1	33-2
3	Adapter Shaft	1	33-3
4	Gear Box Shaft	1	33-4
5	Adapter Cap	1	33-5
6	Motor End Cap	1	33-6
7	Transport Wheel	2	33-7
8	Roller - Main	1	33-8
9	Roller - Extension	1	33-9
10	Capstan	1	33-10
11	Lower Frame	1	33-11
12	Pivot Tube	1	33-12
13	Adjustable Tube	1	33-13
14	Cover - End Cap	1	33-14
15	Spacer - Motor End Cap	1	33-15
16	Top Gear Box Mounting Plate	1	33-16
17	Bottom Gear Box Mounting Plate	1	33-17A
18	Pivot Bracket	1	33-18
19	Extension Arm	1	33-19
20	Wire Hanger	1	33-20
21	Pawl	1	33-21
22	Spring	1	33-22
23	Ring	1	33-23
24	Pin - 1/2” x 4 1/2”	3	33-24
25	Ring - Gear Box Plate	1	33-25
26	Hi/Lo Switch	1	33-26
27	Hi/Lo Stem	1	33-27
28	Roll Pin - Spring 1/8” x 3/4”	1	77-035A
29	Screw Soc. Shoulder - 3/8 x 2”	2	33-29
30	Screw Soc. Hd. Cap - 5/16 - 18 x 7/8”	6	33-30
31	Back-up Plate	2	33-31
32	Screw Soc. Hd. Cap - 3/8 - 16 x 3/4”	4	33-32
33	Screw Soc. Hd. Cap - 7/16 - 14 x 3/4”	2	33-33
34	Ext. Retaining Ring	2	88-40
35	Screw Button Soc. Cap - M8 x 20	8	33-35
36	R-clip	7	33-36
37	Key - 1/4” sq x 1 1/2”	2	33-37
38	Key - 1/4” sq x 1 1/4”	2	8042-11
39	Spacer	1	33-39
40	Screw - Soc. Cap - 5/16 - 18 x 2 1/2”	2	33-40
41	Screw - But. Soc. - #10 - 32 x 5/8”	4	33-41
42	Roll Pin - 5/32 x 1”	3	33-42
43	Pin - 1/2” x 2 1/2” w/ ring	1	33-43
44	Pin - 1/2” x 2 1/2” Headed w/ hole	1	33-44
45	Foot Switch	1	33-45
46	Screw Soc. Hd. Cap - 5/16 - 18 x 2”	1	33-46
47	Nut - Hex (Nylon Insert) 5/16 - 18	1	2-1301-4
48	Switch - Fwd/Rev.	1	33-48
49	Key - 3/16 sq. x 1 1/4”	1	33-49

Item #	Parts Description	Qty.	Part #
50	Screw - Soc. Cap - 5/16 - 18 x 5/8”	2	33-50
51	Pin - 3 Point	1	33-51
52	Pin - Quick Rel. 3/8” x 2”	1	9544-7
53	Screw Hex Hd. Cap - 3/8 - 16 x 3/4”	1	33-53
54	Flat Washer	1	33-54
55	Stand	1	33-55
56	Conduit Coupling - 1”	1	33-56
57	Conduit Coupling - 1 1/4”	1	33-57
58	Conduit Coupling - 1 1/2”	1	33-58
59	Conduit Coupling - 2”	1	33-59
60	Conduit Coupling - 2 1/2”	1	33-60
61	Conduit Coupling - 3”	1	33-61
62	Conduit Coupling - 3 1/2”	1	33-62
63	Conduit Coupling - 4”	1	33-63
64	Strain Relief	1	450-18
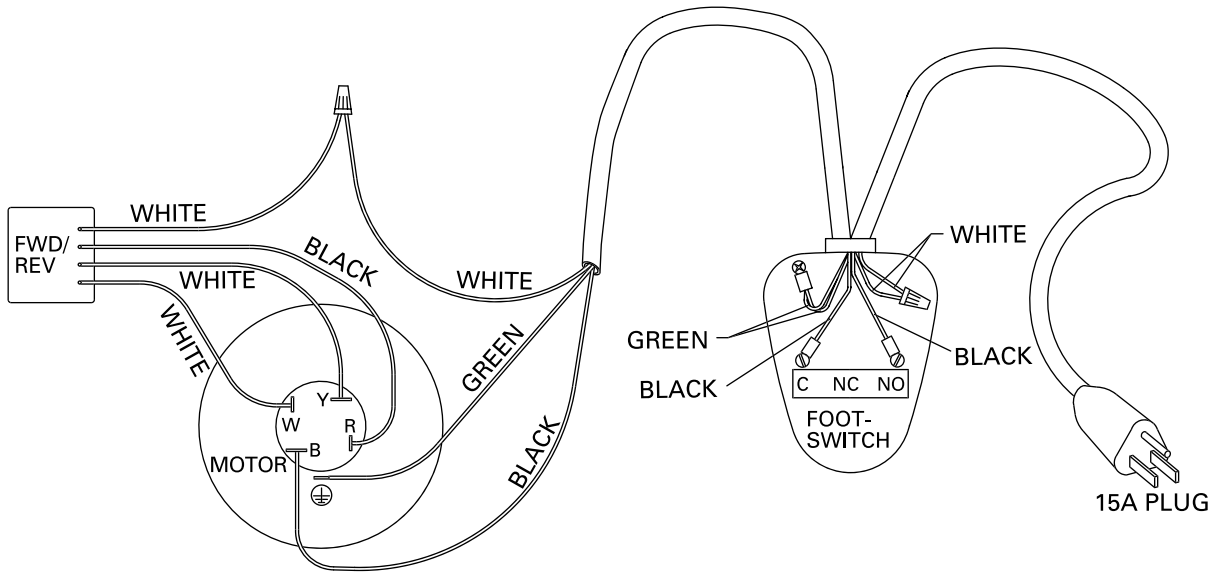
WIRING DRAWING